brandme - internal space

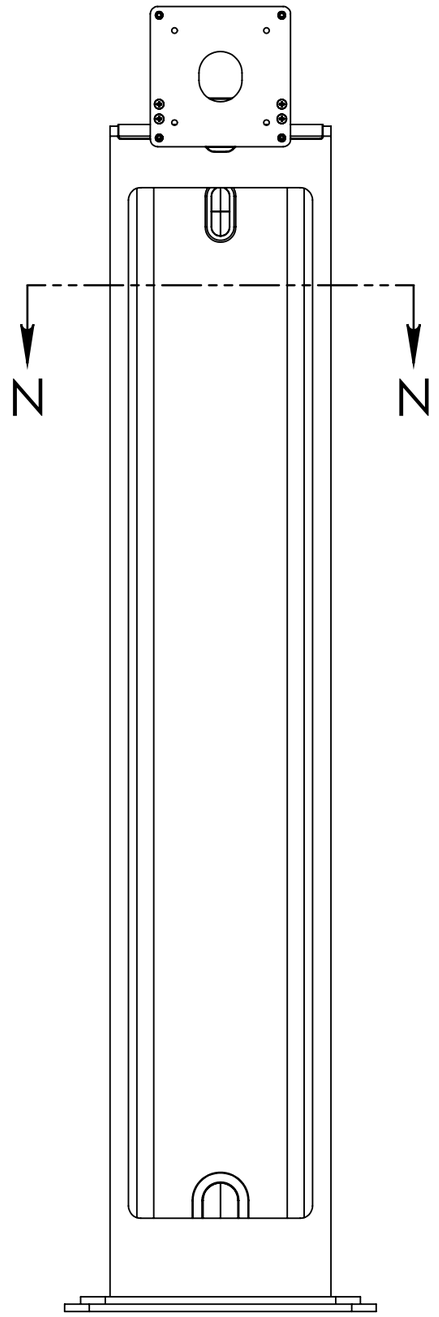

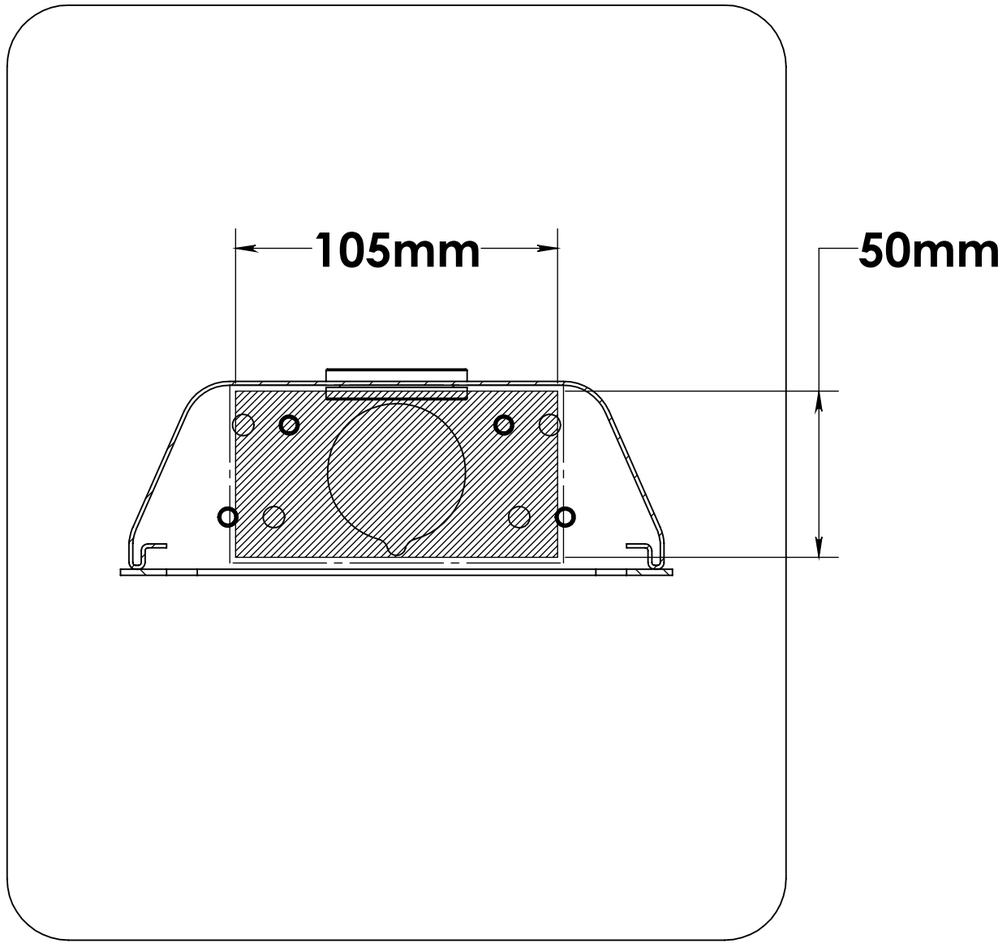

SECTION N-N
SCALE 1 : 2

This drawing and all information contained herein is the property of Compulocks Brands inc. and is subject to the copyright laws. Copyright notice is hereby expressed. This drawing is not to be reproduced without the expressed written approval of Compulocks Brands inc. The information and design contained on this drawing is for the sole use of Compulocks Brands inc.

	NAME	DATE
DESIGN		25/02/2025
APPV'D		25/02/2025
Q.A		

DO NOT SCALE DRAWING

MATERIAL:

DIMENSIONS ARE IN MILLIMETERS UNLESS OTHERWISE SPECIFIED:

COMPULOCKS

TITLE:

DWG NO.

rev:

SKU :

Scale 1:5 | SHEET 1 OF 1 | A3